Vertical Milling Machine

VHF 2

VHF - ideal series for mechanic workshops, training, single part and replacement part manufacturing, and prototyping

- including 3-axis position indicator
- travel
  x-axis 600 mm
  y-axis 270 mm
  z-axis 300 mm
- spindle speed (vertical) 115 - 1750 rpm
- spindle speed (horizontal) (12) 40 - 1300 rpm

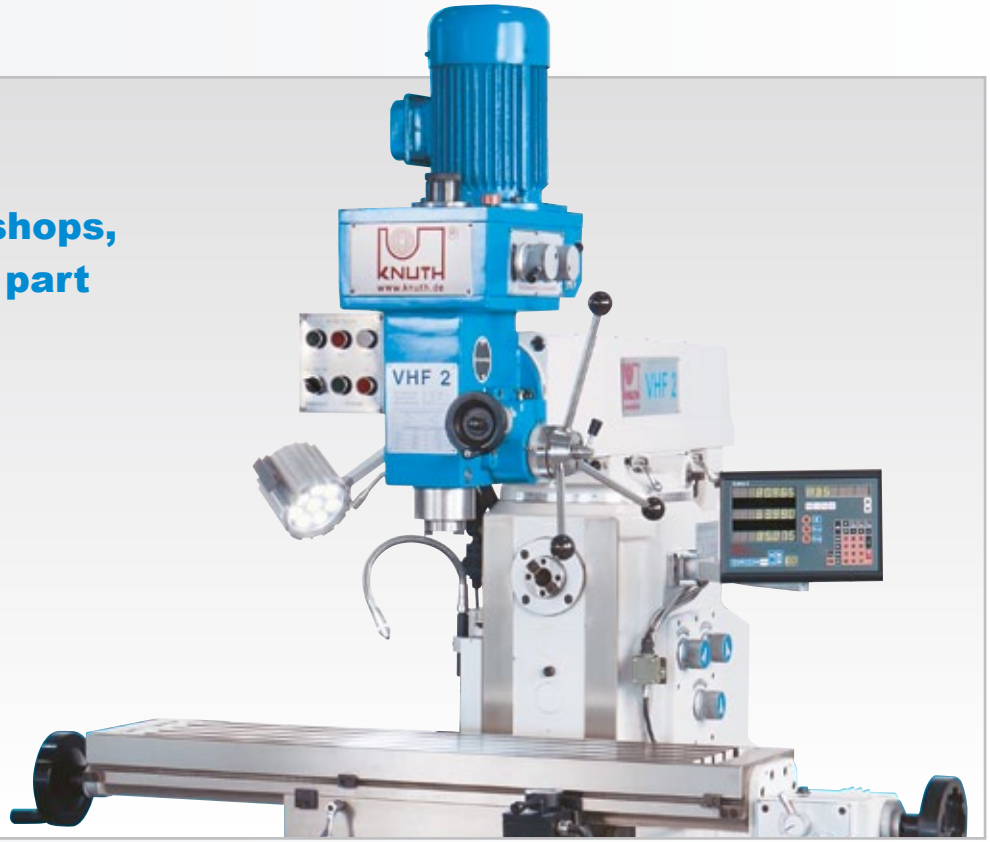

DESCRIPTION

SPECIFICATIONS

OPTION

POSITION INDICATOR

VHF 2

www.knuth.de

This excellent price/performance ratio is made possible by high-volume production with standardized VHF assemblies

feed gears with rapid feed

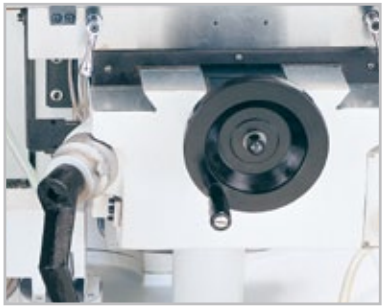

wide, adjustable guides

upper beam swivels

- height adjustment of the work table via automatic feed - precision feed via smooth hand crank
- All 3 axes are provided with clamping devices
- the vertical head swivels to both sides (± 90°), quill feed through capstan or with fine feed hand wheel
- the installed feed (standard equipment) allows movement of the X-axis by hand wheel or through the feed feature
- for horizontal spindle work, the top beam can be turned with; the head by ± 180° on the stand. Spindle speed is controlled through the gear lever.

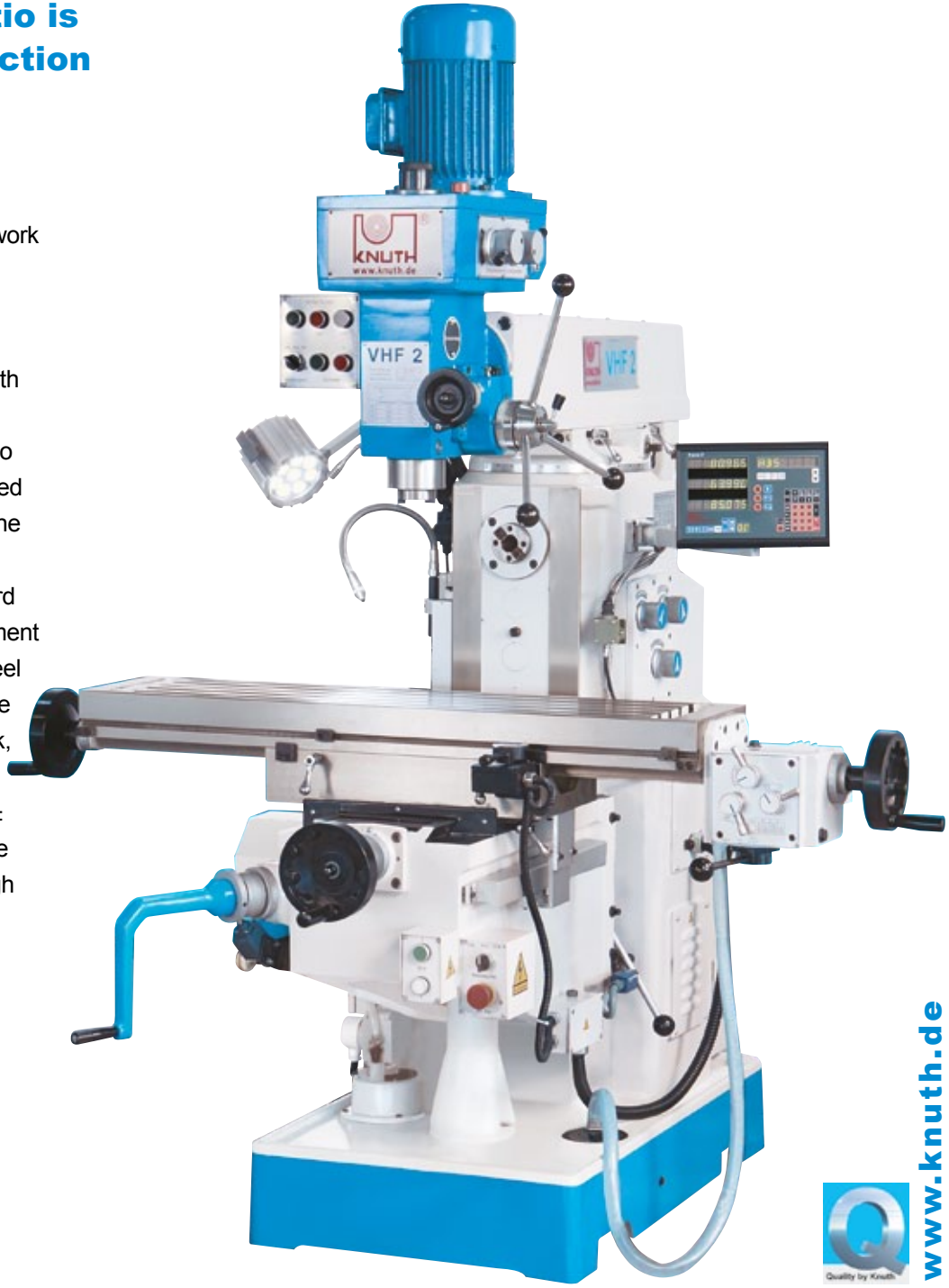

Specifications VHF 2

Cutting capacity		quill stroke	120 mm
drilling capacity, steel	30 mm	spindle center-to-frame distance	160 - 610 mm
milling diameter in steel (max.)	25 mm	spindle nose-to-table surface distance	90 - 400 mm
tapping capacity, steel	M 16	horizontal milling head	
counter-boring capacity	100 mm	spindle speed (horizontal)	(12) 40 - 1300 min^{-1}
Working area		horizontal spindle-to-table surface distance	0 - 300 mm
travel X-axis	600 mm	**Drive capacity**	
travel Y-axis	270 mm	motor rating horizontal spindle	2,2 kW
travel Z-axis	300 mm	motor rating vertical spindle	1,5 kW
table set up area	1120 x 280 mm	**Measures and weights**	
Vertical milling head		overall dimensions	1710 x 1480 x 2100 mm
spindle speed (vertical)	(8) 115 - 1750 min^{-1}	weight	1400 kg
spindle mount (vertical)	SK 40	Part No.	362 650

Standard Equipment

- 3-axis position indicator,
- 2 long cutter arbors (Ø22,Ø27 mm)
- collet set 4-16 mm with mount
- drill chuck 16 mm
- ISO 40 milling chuck
- reducing sleeve ISO 40 / MT3 and ISO 40 / MT2
- coolant system
- work lamp
- operating tools

Option

- Lathe Bore Heads ADA / SK 40	Part No. 103 404	- Shell End Milling Arbor Ø 32 SK 40	Part No. 103 910
- Adapter SK 40 / MT 2	Part No. 103 720	- Shell End Milling Arbor Ø 40 SK 40	Part No. 103 915
- Adapter SK 40 / MT 3	Part No. 103 730	- Pivoted Mounts LK 33	Part No. 103 321
- Adapter SK 40 / MT 4	Part No. 103 740	- Maschine vise MS 125	Part No. 104 955
- Mounting Shaft ISO 40	Part No. 108 637	- Maschine vise NZM 125	Part No. 104 918
- Lathe Bore Head with Boring Bar Set 50 mm 9 pcs.	Part No. 108 631	- Maschine vise PMS 100	Part No. 125 012
- Lathe Bore Head with Boring Bar Set 75 mm, 12 pcs.	Part No. 108 633	- Tailstock / RT 200/250	Part No. 125 820
- Dial for HNCS 130V	Part No. 104 933	- Rotary Table RT 200	Part No. 125 835
- ER 32 Collet Chuck / Mount ISO 40	Part No. 106 056	- Rotary Table RTS 250	Part No. 125 810
- ER 40 Collet Chuck / Mount ISO 40	Part No. 106 062	- Roughing Shank Cutter 10 pcs.	Part No. 108 445
- ER 32 Collet Set 6 pcs.	Part No. 106 052	- End Mill Set DIN 844 B	Part No. 108 450
- ER 40 Collet Set 15 pcs.	Part No. 106 054	- Stud Bolt Set, and T-Slot Nuts 14/M12	Part No. 105 355
- Milling Chuck WELDON BT 30 Ø 6 - 20 mm	Part No. 106 831 - 838	- Optional Accessory Set / ST 130	Part No. 110 970
- Tapping Chuck	Part No. 108 130	- Collet Chuck SK 40	Part No. 104 320
- Swivel Hold-Down Clamp Set 100/M12	Part No. 105 790	- De Luxe Clamping Tool Set 14/M12	Part No. 105 295
- HNCS 130V Hydraulic Machine Vise	Part No. 104 932	- Universal Indexing HeadHT	Part No. 110 953
- HS 125 Hydraulic Machine Vise	Part No. 125 024	- Divider ST 130	Part No. 110 960
- INDEX-feature / RT 160-320	Part No. 125 805	- Swivel Table ST 250	Part No. 129 335
- Shell End Milling Arbor Ø16 SK 40	Part No. 103 895	- Step of Step Blocks	Part No. 105 340
- Shell End Milling Arbor Ø 22 SK 40	Part No. 103 900	- Roughing End Mill Cutter 63	Part No. 108 402
- Shell End Milling Arbor Ø 27 SK 40	Part No. 103 905	- Accessory-Set ISO 40 5-pc.	Part No. 104 596

Part No. 103 404

Part No. 104 955

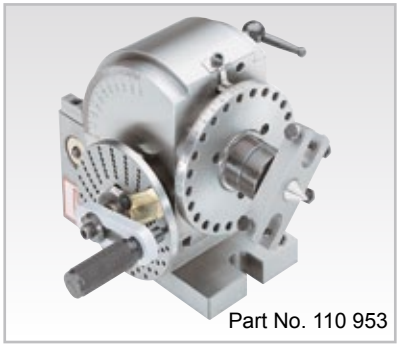
Part No. 110 953

Part No. 1129 335

3-axis position indicator

X.pos 3

Completely assembled, ready for operation and exact measurements

- more accuracy
- lower error rate
- increased productivity
- resulting in valuable time savings
- for increased productivity
- easy to read display
- operator-specific features
- convenient keyboard layout
- resolution: 0.01/ 0.005 mm
- default coordinates
- axis position is maintained when display is turned off
- hole circle pattern calculation
- calculator function
- storage for 10 tools
- radius / diameter toggle
- mm/inch conversion
- easy expansion and maintenance-free operation

Position Indicators...
an absolute necessity for all machine tools

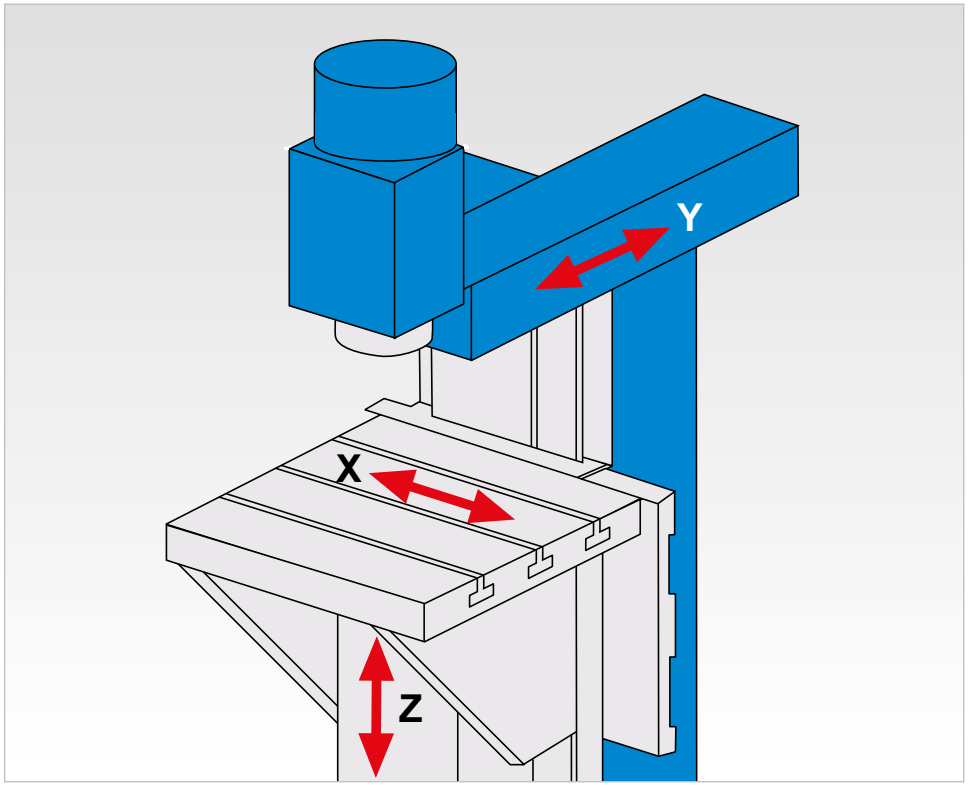

KNUTH Werkzeugmaschinen GmbH • Schmalenbrook 14 • D-24647 Wasbek • Tel. 04321 / 6090 • Fax 04321 / 68900 • E-Mail: info@knuth.de